3D Model is the Master Document of Record
Article or Material Must Conform to REACH Procedure SI900000 Sec.14
Article or Material Must Conform to ROHS Procedure SI900000 Sec.13
Part Must Conform to SI900000 Sec.4 Toxicity Procedure
Geometric Dimensioning & Tolerancing as per ASME Y14.5-2009

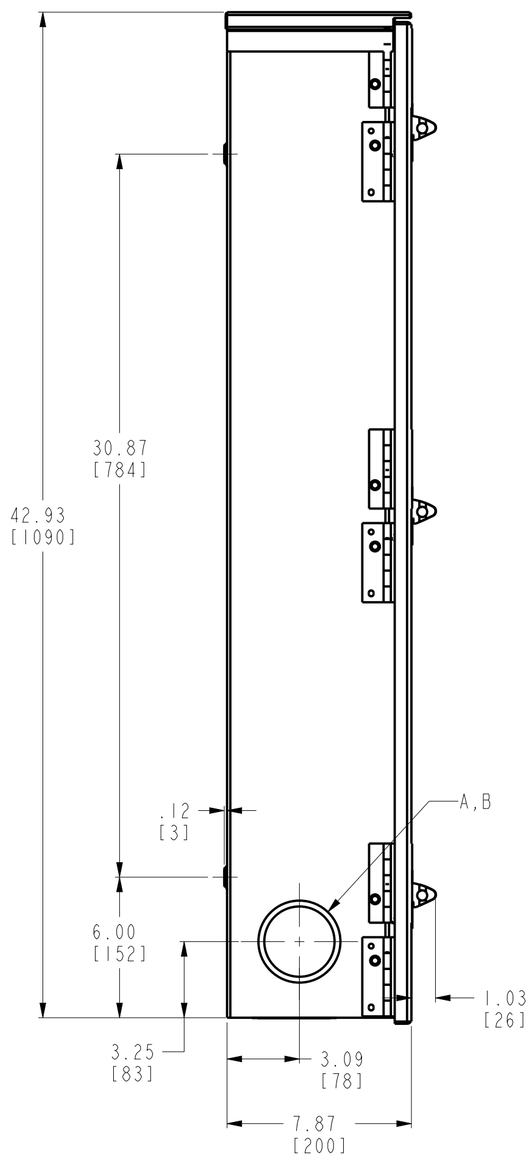

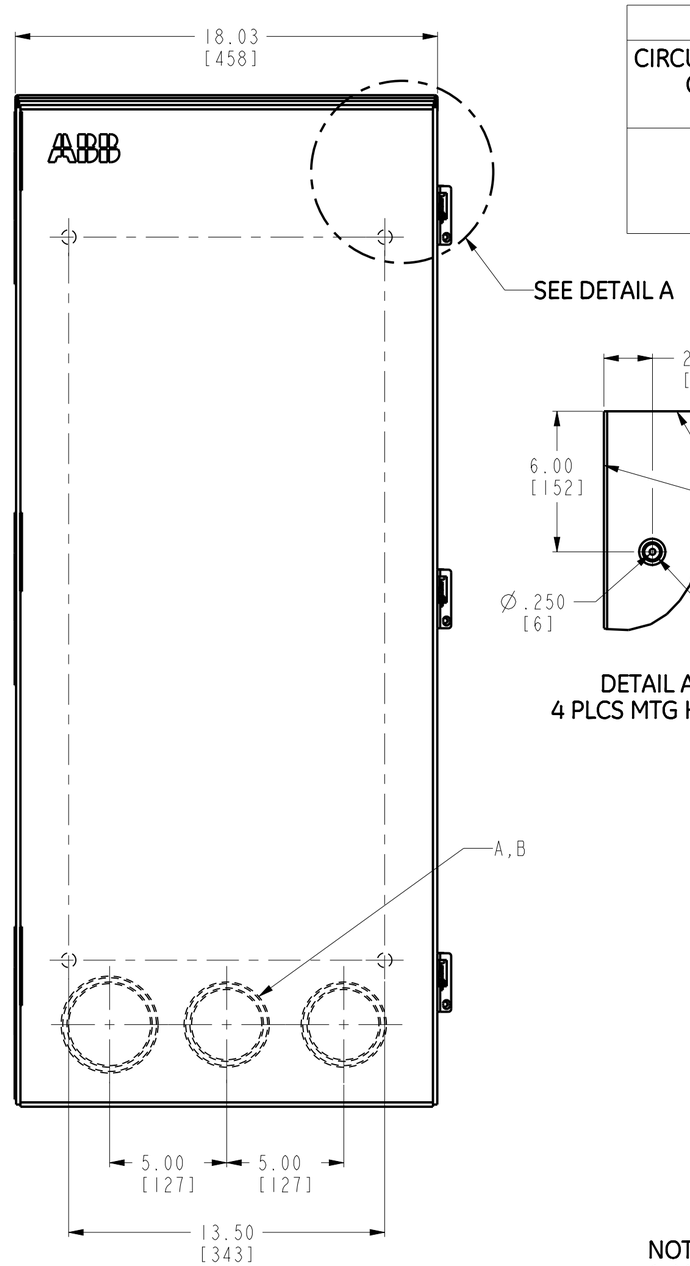

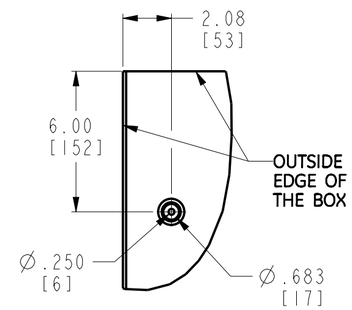

DETAIL A
4 PLCS MTG HOLE

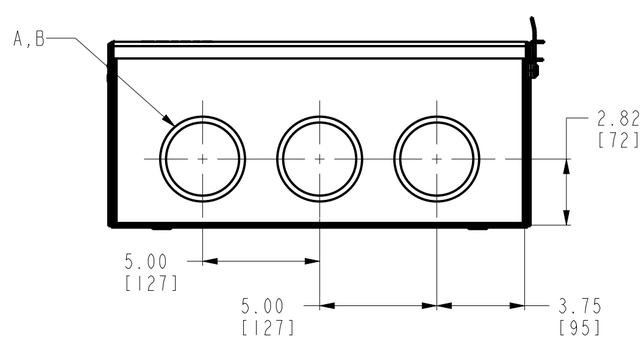

CIRCUIT BREAKER LUGS: CATALOG DATA				
CIRCUIT BREAKER CAT NO. PREFIX	AMPERE RATING	BREAKER LUG CATALOG NUMBER		WIRE SIZE (AWG/KCMIL)
XT5	250-600A	KXT5CUAL350K-3PC	KXT5CUAL350K-4PC	(1) #6-350 CU-AL
		KXT5CUAL500K-3PC	KXT5CUAL500K-4PC	(1) 250-500 CU-AL
		KXT5CUAL2X500K-3PC	KXT5CUAL2X500K-4PC	(2) #2/0-500 CU-AL

FIELD INSTALLABLE NEUTRAL ASSEMBLY AND GROUND KIT			
CAT NO. PREFIX	TYPE	AMPERE RATING	WIRE SIZE (AWG/KCMIL)
TGL6	GROUND KIT	600-1200A	(3) #2-250 CU-AL
TNIA400 TNIA400XTGF	NEUTRAL ASM	125-400A	(1) #4-600 CU-AL (2) #1/0-250 CU-AL
TNIA600 TNIA600XTGF	NEUTRAL ASM	225-600A	(2) #2/0-500 CU-AL

KNOCKOUTS				
SYMBOLS	CONDUIT SIZE		DIAMETER	
	IN	MM	IN	MM
A	3 1/2	89	4 1/8	105
B	3	76	3 3/5	91

NOTES:
1. MATERIAL: LOW CARBON STEEL
2. FINISH: ELECTROCOAT ENAMEL, GRAY
3. AGENCY APPROVAL: cULus LISTED -FILE E11592
4. SUITABLE FOR USE AS SERVICE EQUIPMENT WHEN NEUTRAL ASSEMBLY IS INSTALLED
5. THE SHORT CIRCUIT RATING OF THIS ENCLOSED CIRCUIT BREAKER IS EQUAL TO THE INTERRUPTING RATING, AT THE SUPPLY VOLTAGE MARKED ON THE CIRCUIT BREAKER INSTALLED
6. FOR ALTERNATE LUGS CONSULT THE BUYLOG

DUAL DIMENSIONS INCHES [MILLIMETERS]

ABB PROPRIETARY AND CONFIDENTIAL INFORMATION
The information contained in the document has to be kept strictly confidential.
Any unauthorized use, reproduction, distribution or disclosure to third parties is strictly forbidden.
ABB reserves all rights regarding intellectual Property Rights.
Copyright: 2018 ABB. All rights reserved.

Third Angle Projection

DRAWING FILE 208C2838SH3	MODEL FILE 208C2838SH3	ABB	
DATE MODIFIED 18-Sep-20 04:10:20 AM	DESIGNED BY NAGARAJ.M		
Calculated for: VOLUME -- --	CN# C100130	APPROVED BY S.KIM	TITLE OUTLINE XT5ENCL600R
	◇ Critical to Quality Characteristic		
MASS -- --	MATERIAL SPECIFICATION -	FINISH SPECIFICATION --	UNITS in / LOCAL TITLE --
UNLESS OTHERWISE SPECIFIED TOLERANCE ON: 1 PL DECIMALS ± 0.0 2 PL DECIMALS ± 0.02 3 PL DECIMALS ± 0.005 ANGLES ± 1.0	MATERIAL DESCRIPTION --		SIZE C / ROOT NUMBER -- / REV 2 / RELEASE STATE Released
	FINISH DESCRIPTION --		SCALE 1:5 / PRODUCT LINE MCCB-ENCLOSURES / SHEET 1 of 1

us_3rd_c.frm