BS STANDARD MALLEABLE IRON PIPE FITTINGS-220 SOCKET

Type：220 **Doc No: DS-122-220-01-E**

1.0 PRODUCT OVERVIEW

The socket is one kind of malleable iron pipe fittings, which can connect two pipes of the same nominal diameter. The connecting thread is British standard (ISO 7/1).

Dimensions:

1/8” (DN6)-6” (DN150)

Design Standard:

EN 10242, GB/T 3287

Connection Standard:

ISO 7/1, GB/T 7306.2

Working Pressure:

PN16

Application:

The socket is suitable for medium and low pressure pipeline systems, whose nominal pressure is not exceeding 2.5 MPa and working temperature range is between -20 °C and 120 °C. It is mainly applied in water, oil, air, gas, steam system, etc.

Material of Matching Products:

Q195, EN10255

Surface Treatment:

☐ Black
☐ Hot-dip galvanizing
☐ Hot-dip galvanizing+ Electroplated zinc

Sign Off:
Owner:_____ Contractor:_____ Engineer: _____
Location:_____ Date:_____ Approved& Date: _____

☐ Epoxy power painting
☐ Electroplated zinc
☐ Others would be available upon clients' detailed request

2.0 APPROVALS

3.0 DIMENSIONS AND PERFORMANCE

Dimensions

No	Size	Dim.(mm) A
1	6	25±1.5
2	8	27±1.5
3	10	30±1.5
4	15	36±2.0
5	20	39±2.0
6	25	45±2.0
7	32	50±2.0
8	40	55±2.5
9	50	65±2.5
10	65	74±2.5
11	80	80±3.0
12	100	94±3.0
13	150	120±3.5

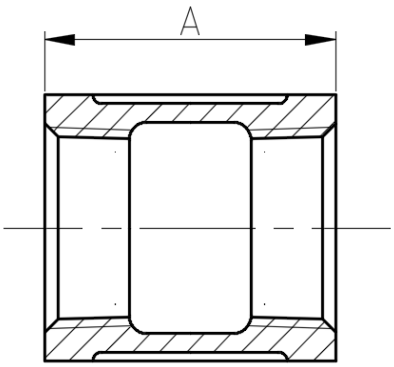

Performance

1. All fittings shall comply with the maximum permissible working pressure and temperature range given in the table. The pressure value between 120 °C and 300 °C is determined by linear interpolation. The normal temperature of the pipe is not lower than -20 °C. When used outside the specified pressure and temperature range, it should be negotiated with the manufacturer.

Temperature Range ℃	Max Working Pressure MPa
-20-120	2.5
120-300	Interpolated value
300	2

Sign Off:
Owner:_____ Contractor:_____ Engineer: _____
Location:_____ Date:_____ Approved& Date: _____

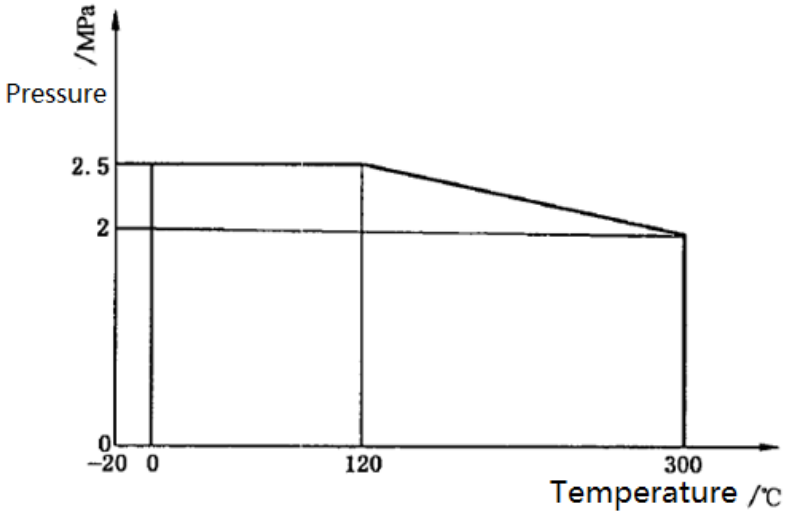

2. The inside of the pipe fittings shall be able to withstand an air pressure of not less than 0.5 MPa, and the pipe fittings shall be completely immersed in the water tank for visual inspection without leakage.

4.0 REFERENCE MATERIALS

Approved certification for Malleable Iron Pipe Fittings

Sign Off:

Owner:_____ Contractor:_____ Engineer: _____

Location:_____ Date:_____ Approved& Date: _____